NOTE:
NO PERMANENTLY AFFIXED LADDERS ARE PERMITTED IN WET WELL.

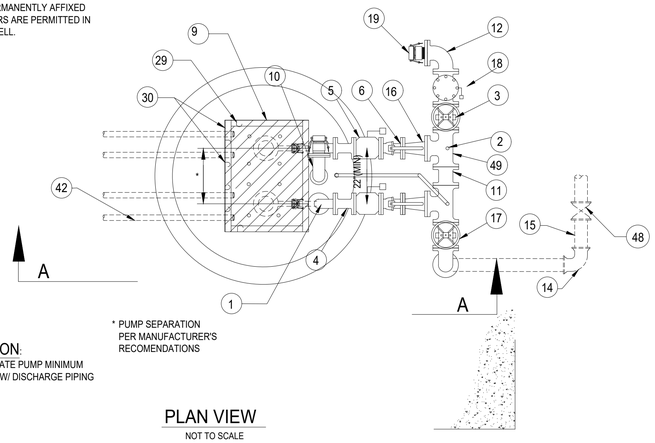

CAUTION:
COORDINATE PUMP MINIMUM SPACING W/ DISCHARGE PIPING LAYOUT

PLAN VIEW

NOT TO SCALE

ABBREVIATIONS:

BFP - BACK-FLOW PREVENTER
DI - DUCTILE IRON
FG - FLANGED
MJ - MECHANICAL JOINT
PE - PLAIN END
PS - PUMP STATION
RJ - RESTRAINED JOINT
SS - STAINLESS STEEL

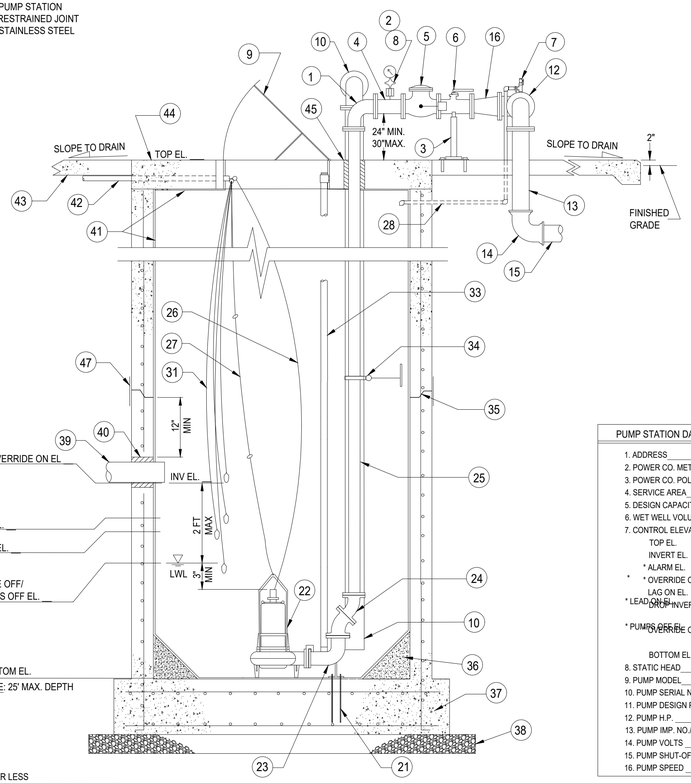

SECTION A-A

NOT TO SCALE

KEY:

1. 2" FG 90° SS BEND (2 REQ.)
2. 1/2" TAP w/ 1/2" x 2" 316 SS NIPPLE & 1/2" LOCKABLE BALL VALVE w/ SS BALL
3. ADJUSTABLE PIPE SUPPORT, SIZED AS REQUIRED (4 REQ) - SEE DETAIL, DRAWING M3
4. 2" FG SS SPOOL PIECE, LENGTH AS REQUIRED (6" MIN)
5. 2" FG SS SWING CHECK VALVE (2 REQ)
6. 2" FG SS LOCKABLE BALL VALVE (2 REQ)
7. AIR RELEASE ASSEMBLY TO INCLUDE 1" TAP W/ 1" x 2" 316 SS NIPPLE, 1" SS THREADED TEE, 1" x 1/2" SS REDUCING BUSHING, 1/2" SS BALL VALVE W/ 1/2" PVC THREADED PLUG, AND 1" SS BALL VALVE W/ 1" PVC UNDER-SLAB DRAIN - SEE DETAIL, DRAWING M3
8. COMPOUND PRESSURE GAUGE (STAINLESS STEEL, SILICONE FILLED, W/ SILICONE FILLED DIAPHRAGM SEAL), PROVIDE ONE PER STATION.
9. ALUMINUM FRAME & SINGLE ACCESS HATCH W/ 30"x 36" MIN. OPENING, HINGED ON DISCHARGE PIPING SIDE AND CAPABLE OF BEING SECURED IN THE OPEN POSITION. CONTRACTOR SHALL DRILL EIGHT 1/2" DIA. HOLES IN HATCH COVER.
10. AUXILIARY SUCTON PIPE ASSEMBLY - SEE DETAIL, DRAWING M2
    AUX. SUCTION PIPE TO BE LOCATED BETWEEN THE DISCHARGE PIPES.
11. 4" FG DIP, LENGTH AS REQUIRED
12. 4" FG 90° BEND
13. 4" FG x PE DIP, LENGTH AS REQUIRED
14. 4" MJ 90° BEND W/ RESTRAINED JOINTS
15. 4" PVC C900 W/ RESTRAINED JOINTS AS REQUIRED (MIN DEPTH OF 48" TO CROWN OF PIPE)
16. 2" x 4" FG SS REDUCER
17. 4" FG RESILIENT SEAT GATE VALVE (2 REQ)
18. 4" FG SWING CHECK VALVE PER APP. B
19. EMERGENCY BYPASS/PUMP-IN 4" CAMLOCK MALE COUPLER W/ CAP, THREADED NIPPLE AND FLANGE
20. OPENING IN CONCRETE SLAB, GRAVEL FILLED - MINIMUM 8" CLEARANCE AROUND PIPE
21. 3/4" DIA. SS ANCHOR BOLTS & NUTS (DOUBLE NUTS) PER PUMP MANUFACTURER'S RECOMMENDATIONS, EPOXIED INTO BASE SLAB
22. PUMP - GRINDER W/ FRONT LOAD RAIL SYSTEM (2 REQ)
23. BASE ELBOW TO BE PROVIDED BY PUMP SUPPLIER (2 REQ). OUTLET TO HAVE THREADED NIPPLE AND FLANGE.
24. 2" FG 45° BEND (AS REQUIRED FOR OFFSET IN WETWELL). LOCKING WASHER REQ'D FOR ALL FG CONNECTIONS IN WET WELL.
25. 2" 316L SS SCHEDULE 40 FLANGED DISCHARGE PIPING, LENGTH AS REQUIRED. LOCKING WASHER REQ'D FOR ALL FG CONNECTIONS IN WET WELL.
26. POWER CABLES TO PUMPS
27. PUMP LIFTING CABLES (3/8" 316 SS) W/ 4" 316 SS RINGS LOCATED @ 5-FT INTERVALS
28. 1" DRAIN FROM ARV
29. 316 SS POWER CABLE HOOKS - SEE DETAIL, DRAWING M2
30. 316 SS CONTROL CABLE HANGER FOR FLOAT SWITCH CABLES - SEE DETAIL, DRAWING M2
31. LEVEL FLOAT SWITCHES (4 REQ)
32. N/A
33. 3/4" (O.D.) 316 SS GUIDE RAILS, FRONT MOUNT (2 PER PUMP), OR PER PUMP MANUFACTURER'S RECOMMENDATION
34. 316 SS INTERIOR PIPE SUPPORT - SEE DETAIL, DRAWING M3
35. ELASTOMERIC GASKET
36. NON-SHRINK GROUT FILLET ALL AROUND, 4000 PSI CONCRETE W/ MAX AGGREGATE SIZE OF 3/8" & MIN. SLOPE OF 1:1 (MAX WIDTH/HT. OF 2-FT), TO BE COATED W/ INTERIOR WETWELL PROTECTIVE COATING (SEE #41)
37. FIRST WET WELL RISER SECTION & BASE SLAB SHALL BE MONOLITHICALLY OR INTEGRALLY CAST PER ASTM C478 - REFER TO STRUCTURAL DRAWING S1-S4
38. LEVEL COURSE OF CRUSHED STONE - 6" MIN. THICKNESS
39. PVC, C900 INFLUENT GRAVITY MAIN, TO EXTEND 4" INSIDE WETWELL
40. FLEXIBLE SEAL
41. WET WELL INTERIOR PROTECTIVE COATING
42. ELECTRICAL CONDUITS (SCH 80 PVC, 2" MIN.), INSTALLED UNDER GRADE SLAB AND CENTERED IN WETWELL TOP SLAB, FOUR TOTAL - SEE ELECTRICAL DETAILS AND STRUCTURAL DRAWING S1-S4
43. GRADE SLAB - REFER TO STRUCTURAL DRAWING S1-S4
44. WET WELL TOP SLAB - REFER TO STRUCTURAL DRAWING S1-S4
45. LINK SEAL
46. 1" BRASS WATER SERVICE W/ APPROVED BFP AND METER - SEE DETAIL, DRAWING M2
47. WRAP APPLIED AT EXTERIOR OF WETWELL JOINTS
48. 4" MJ PLUG VALVE w/ RJ - ISOLATION VALVE, TO BE LOCATED ON PUMP STATION PROPERTY AT RIGHT OF WAY.
49. 4" x 4" FG DI TEE (2 REQ.)
50. N/A

NOTE: REFER TO TECHNICAL MANUAL AND/OR TECHNICAL SPECIFICATIONS AS APPLICABLE FOR MATERIALS REQUIREMENTS AND THE LIST OF APPROVED PRODUCTS

PUMP STATION DATA:

1. ADDRESS _____
2. POWER CO. METER NO. _____
3. POWER CO. POLE/PAD NO. _____
4. SERVICE AREA _____
5. DESIGN CAPACITY _____GPM
6. WET WELL VOLUME _____GALLONS _____FT. DIA.
7. CONTROL ELEVATIONS:
   - TOP EL. _____
   - INVERT EL. _____
   - * ALARM EL. _____
   - * OVERRIDE ON EL. _____
   - LAG ON EL. _____
   - * LEAD ON EL. _____
   - DROP INVERT EL. _____(IF REQUIRED)
   - _____
   - * PUMPS OFF EL. _____
   - OVERRIDE OFF EL. _____
   - _____
   - _____
   - BOTTOM EL. _____
8. STATIC HEAD _____FT.
9. PUMP MODEL _____
10. PUMP SERIAL NO. _____
11. PUMP DESIGN POINT _____GPM @ _____TDH
12. PUMP H.P. _____PHASE _____
13. PUMP IMP. NO./DIA. _____
14. PUMP VOLTS _____AMPS _____
15. PUMP SHUT-OFF HEAD _____FT.
16. PUMP SPEED _____RPM

PUMP STATION DESIGN NOTES (TYP):

1. IN ORDER TO COORDINATE THE MECHANICAL, ELECTRICAL AND STRUCTURAL INSTALLATION, THE DESIGN ENGINEER SHALL REFER TO HILLSBOROUGH COUNTY'S MECHANICAL DRAWINGS (M1-M3), ELECTRICAL DRAWINGS (E 0.0-E 5.0), STRUCTURAL DRAWINGS (S1-S4); AND THE *"HC WATER, WASTEWATER & RECLAIMED WATER TECHNICAL MANUAL FOR SUBDIVISION AND SITE DEVELOPMENT"* (LATEST EDITION) , AND THE *"HC WATER, WASTEWATER & RECLAIMED WATER TECHNICAL SPECIFICATIONS"* (LATEST EDITION).
2. THE DESIGN ENGINEER SHALL NOT USE THESE DRAWINGS FOR A SPECIFIC SITE INSTALLATION. A DETAILED SITE PLAN SHALL BE SHOWN IN THE BOX PROVIDED ON THIS SHEET, OR ON A SEPARATE SHEET AS NEEDED. THE SITE PLAN SHALL BE DRAWN TO SCALE AND INCLUDE CRITICAL SITE ELEVATIONS (SUCH AS ROAD, SLAB, DRIVEWAY, AND SURROUNDING AREAS - INCLUDING FINISHED FLOOR OF BUILDINGS ON ADJACENT LOTS), DIMENSIONS, HARDSCAPE ELEMENTS, AND THE PUMP STATION'S RELATIONSHIP TO THE SURROUNDING AREA.
3. THESE DRAWINGS REPRESENT THE STANDARD DESIGN FOR ALL HILLSBOROUGH COUNTY WASTEWATER PUMPING STATIONS. IT WAS DEVELOPED TO IMPROVE RELIABILITY AND MAINTAINABILITY, MINIMIZE SPARE PARTS AND INCREASE SERVICE LIFE. ALL REQUESTS FOR DEVIATIONS FROM THIS STANDARD MUST BE MADE IN WRITING TO THE DEVELOPMENT SERVICES DEPARTMENT FOR SUBDIVISION AND SITE DEVELOPMENT; AND TO THE PUBLIC UTILITIES DEPARTMENT (PUD) PROJECT MANAGER FOR ALL CAPITAL IMPROVEMENT PROJECTS. WRITTEN APPROVAL FROM PUD UTILITY DESIGN SECTION MGR. IS REQUIRED BEFORE MODIFICATIONS ARE MADE.
4. THE ENGINEER IS RESPONSIBLE FOR COORDINATING WITH THE PUMP SUPPLIER TO ENSURE THAT PROPER PUMP AND PIPE SPACING IS ACCOMMODATED.
5. PUMP STATION SLAB DIMENSIONS SHALL MEET OR EXCEED MINIMUM SHOWN.
6. THE ENGINEER IS ADVISED THAT COUNTY APPROVAL OF THE PUMP STATION DESIGN DOES NOT CONSTITUTE A RELEASE FROM PROFESSIONAL LIABILITY BY THE ENGINEER NOR SHIFT RESPONSIBILITY FOR ANY DESIGN DECISIONS REPRESENTED HEREIN TO THE COUNTY OR OTHER REGULATORY AGENCY. THE ENGINEER IS RESPONSIBLE FOR THE FINAL ELECTRICAL, MECHANICAL, AND STRUCTURAL DESIGNS.
7. DISCHARGE PIPE SUPPORTS ARE REQUIRED FOR WET WELL DEPTHS GREATER THAN 10 FEET.
8. IF THE INFLUENT INVERT ELEVATION IS GREATER THAN 2-FEET ABOVE THE LOW WATER LEVEL (LWL), A DROP INVERT CONNECTION SHALL BE REQUIRED, DROP INVERT TO BE SET AT THE LEAD-ON ELEVATION (SEE DROP CONNECTION DETAIL, DRAWINGS S2, S4 & M3).
8. LOW WATER LEVEL MUST BE AT LEAST 3" ABOVE TOP OF PUMP. FILL IN THE FOLLOWING INFORMATION: [INSTALLED HEIGHT (PER PUMP MFR.) + 3" = ___FT] ≤ [LWL - BOTTOM EL. = ____FT]

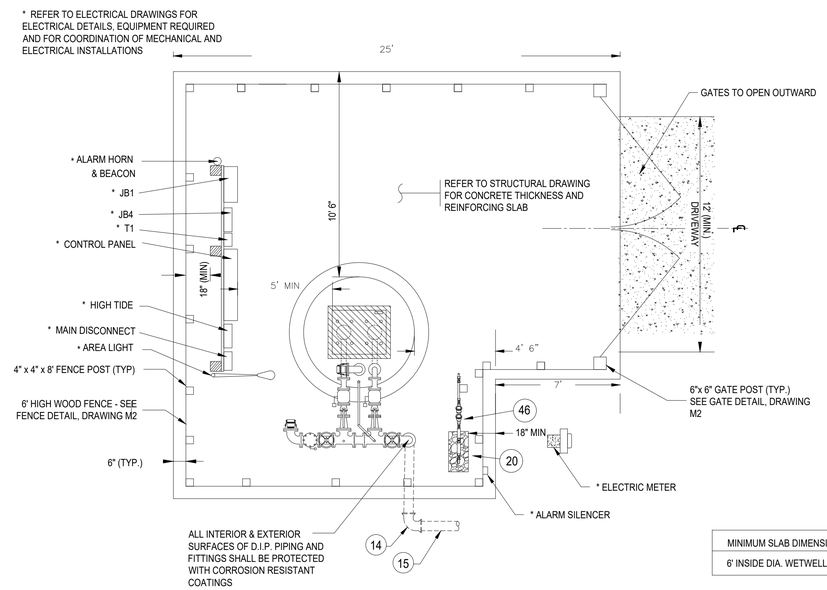

MINIMUM SLAB DIMENSIONS
6' INSIDE DIA. WETWELL ... 24' x 18'

STANDARD FOOTPRINT - MIN. DIMENSIONS

SCALE: 1" = 4'-0"

SHOW TO SCALE AND INCLUDE ELEVATIONS AS TO ROAD, SLAB, DRIVEWAY AND SURROUNDING AREAS.

DETAILED SITE PLAN

(BY ENGINEER) SCALE: 1"=

REV.NO.	DESCRIPTIONS	DATE

REVISIONS

SEAL

SEAL

Hillsborough County Florida

PUBLIC UTILITIES DEPARTMENT
TECHNICAL SERVICES DIVISION
925 E. TWIGGS STREET/TAMPA FLORIDA 33602/PH. (813) 272-5977

STANDARD WASTEWATER IN-FILL PUMP STATION

MECHANICAL LAYOUT AND SITE PLAN

DATE: OCTOBER 28 2021
PROJ. #
DRAWN
DESIGNED
CHECKED
PROJ. MGR.

SCALE
HORIZONTAL:
VERTICAL: NA

FILE NUMBER
DRAWING NUMBER
M1

STATUS: FINAL DESIGN

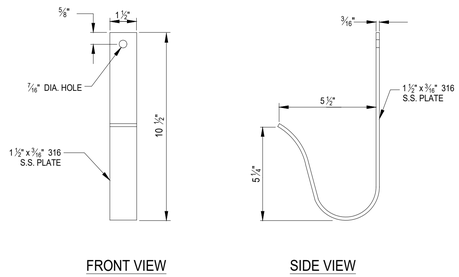

POWER CABLE HOOK DETAIL

NOT TO SCALE

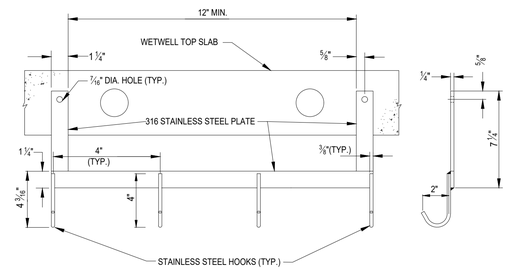

LEVEL CABLE HANGER DETAIL

NOT TO SCALE

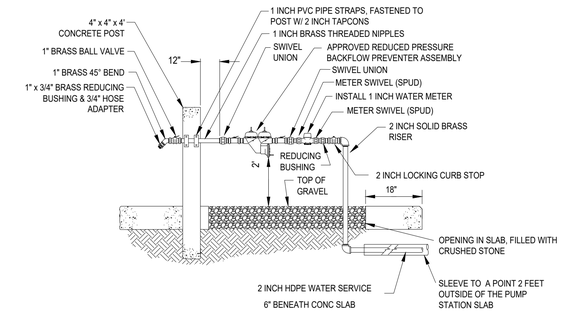

NOTES:

1. ALL PIPING TO BE 2-INCHES UP THROUGH THE LOCKING CURB STOP.
2. 2 INCH SERVICE LINE SHALL USE A 2 INCH TAPPING SLEEVE & VALVE AT THE WATER MAIN CONNECTION.
3. FOR WET WELLS 20 FT.OR MORE IN DEPTH, A 2 INCH WATER METER AND SERVICE SHALL BE PROVIDED. HOSE CONNECTION TO BE 2 INCH MALE CAMLOCK CONNECTOR.

WATER SERVICE DETAIL

NOT TO SCALE

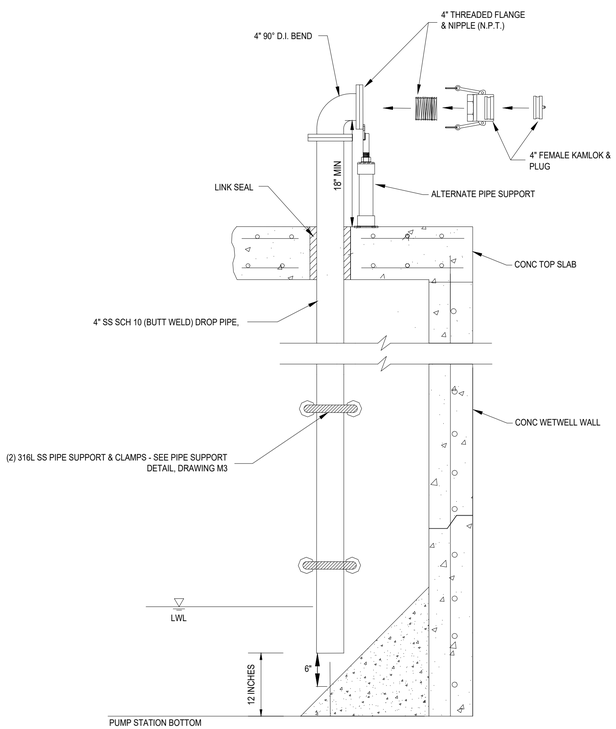

AUX. SUCTION PIPE DETAIL

NOT TO SCALE

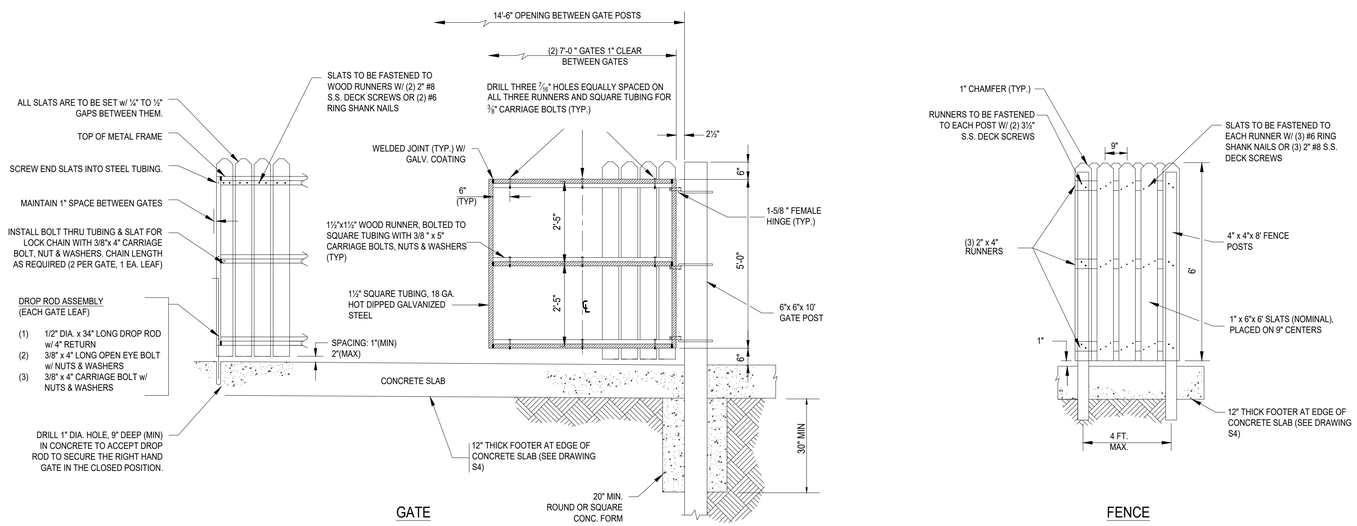

FENCE & GATE CONSTRUCTION NOTES

1. ALL WOOD SHALL BE PRESSURE TREATED. POSTS SHALL BE RATED FOR BURIED WOOD.
2. ALL STRUCTURAL MEMBERS AND CROSS BRACING AS SHOWN.
3. CROSS BRACING SHALL BE ON INSIDE OF GATE.
4. USE HOT DIP GALVANIZED OR STAINLESS STEEL HARDWARE, FASTENERS, DROP RODS, CABLES, ETC. FOR ALL FENCE AND GATE CONSTRUCTION.
5. ALL NAIL & SCREW HEADS SHALL BE SET FLUSH W/ WOOD SURFACE (NOT COUNTER-SUNK).
6. USE TAMPER PROOF HEAVY DUTY HINGES AND LATCHES ON GATE (MINIMUM OF THREE HINGES PER GATE LEAF).
7. SOME PUMP STATION LOCATIONS MAY REQUIRE ARCHITECTURAL STYLE FENCING - CONSULT COUNTY.

PUMP STATION ENCLOSURE DETAIL

NOT TO SCALE

INSTALLATION NOTE:

CONTRACTOR TO REFER TO DRAWINGS M1-M3, E 0.0-E 5.0 AND S1-S4 IN ORDER TO COORDINATE ALL MECHANICAL, ELECTRICAL AND STRUCTURAL INSTALLATIONS.

REV.NO.	DESCRIPTIONS	DATE

REVISIONS

SEAL

SEAL

Hillsborough County Florida

PUBLIC UTILITIES DEPARTMENT
TECHNICAL SERVICES DIVISION
925 E. TWIGGS STREET/TAMPA FLORIDA 33602/PH. (813) 272-5977

STANDARD WASTEWATER IN-FILL PUMP STATION

MECHANICAL DETAILS

DATE: OCTOBER 28 2021
PROJ. #
DRAWN
DESIGNED
CHECKED
PROJ. MGR.

SCALE
HORIZONTAL:
VERTICAL: NA

FILE NUMBER
DRAWING NUMBER
M2

STATUS: FINAL DESIGN

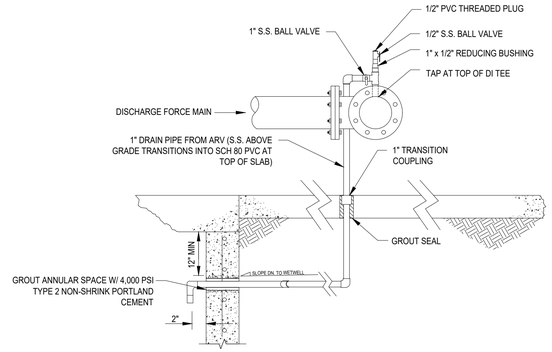

ARV DRAIN PIPE ASSY.

NOT TO SCALE

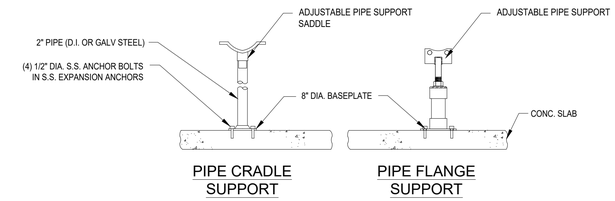

EXTERIOR PIPE SUPPORT DETAIL

NOT TO SCALE

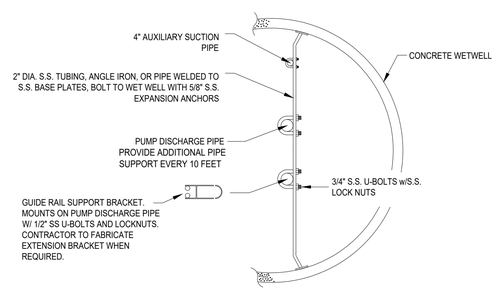

INTERIOR PIPE & GUIDE RAIL SUPPORTS - TOP VIEW

NOT TO SCALE

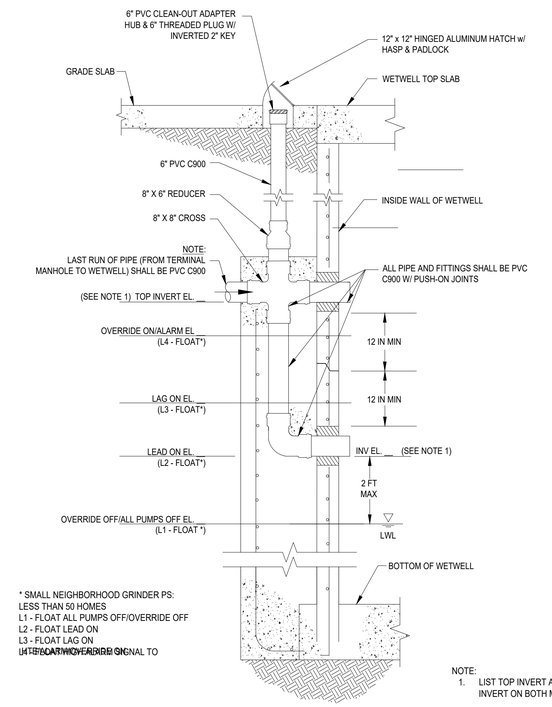

DROP CONNECTION DETAIL

NOT TO SCALE

INSTALLATION NOTE:

CONTRACTOR TO REFER TO DRAWINGS M1, M2, M3, E 0.0-E 5.0, AND S1-S4 IN ORDER TO COORDINATE ALL MECHANICAL, ELECTRICAL AND STRUCTURAL INSTALLATIONS.

REV.NO.	DESCRIPTIONS	DATE

REVISIONS

SEAL

SEAL

Hillsborough County Florida

PUBLIC UTILITIES DEPARTMENT
TECHNICAL SERVICES DIVISION
925 E. TWIGGS STREET/TAMPA FLORIDA 33602/PH. (813) 272-5977

STANDARD WASTEWATER IN-FILL PUMP STATION

MECHANICAL DETAILS

DATE: OCTOBER 28 2021
PROJ. #
DRAWN
DESIGNED
CHECKED
PROJ. MGR.

SCALE
HORIZONTAL:
VERTICAL: NA

FILE NUMBER
DRAWING NUMBER
M3

STATUS: FINAL DESIGN