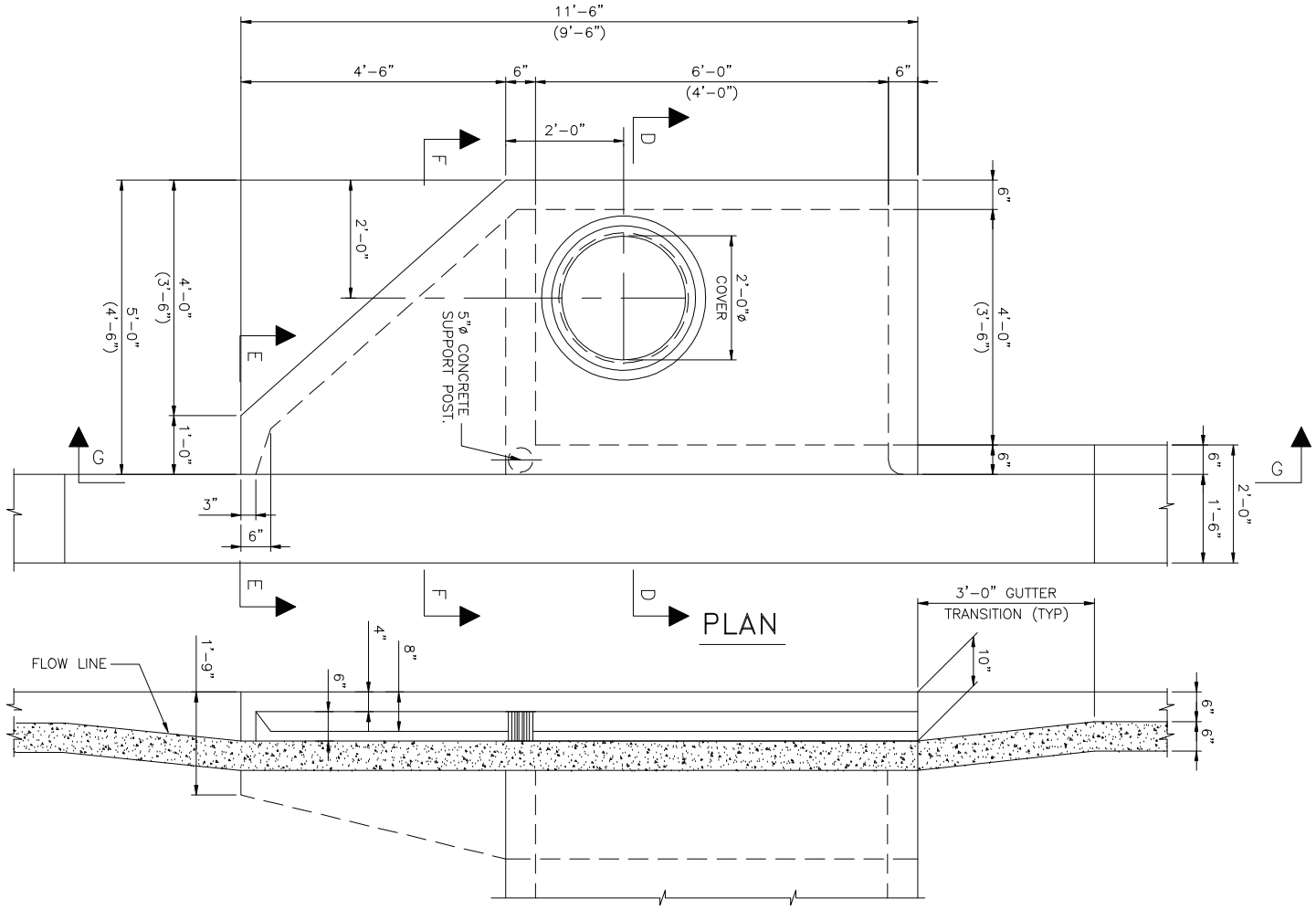

SECTION G–G

REVISION DATE : 12/08	TRANSPORTATION TECHNICAL MANUAL	Hillsborough County Florida	TYPE II INLET (1 OF 2) (ADJACENT TO CURB) PLAN AND ELEVATION	DRAWING NO. TD–18 SHEET NO. 9 OF 14